Sapphire Ring Project
NTIA Middle Mile Grant Application
Network Logical Diagram Project Details

Narrative:

The Sapphire Ring Project affects 42 communities, portions of six counties, in Western Montana.

The Sapphire Ring Project funds will be used to deploy up to 432 count fiber in duct. Applicant estimates that anchor institutions will utilize 128 fibers, providers (to include Applicant) will use 160 fibers and 144 fibers will be required to support consumers broadband access along the fiber ring to include unserved and underserved communities. The Sapphire Ring will feature buried, ring protected, fiber deployed along existing roadways. Fiber deployed will range from 72, 144, 288 and 432 count fibers with all fiber deployed in duct to ensure efficient fiber deployment to meet future needs.

Applicant will include 50 feet of slack fiber per point of interconnection indicated in the following diagrams. Slack is built into the project plan to mitigate restoration time of potential fiber cuts and to be able to splice the fiber within the controlled environment of a fiber trailer.

Dedicated colocation space for non-applicant providers is not planned at the point of interconnections identified on the diagrams below. The point of interconnections indicated on the diagram shows where the Primary Applicant and Subrecipient will interconnect their networks to complete the ring. Additional colocation space is not planned at those points of interconnection because they are not expected to be the points connecting providers would logically choose for interconnection. Applicant and subrecipient will work with providers to provide access at any location along the ring where it is technically feasible to do so. It is Applicant's experience that providers can have varying colocation needs so each connection to a network is an individual case.

Infrastructure Details

- Fiber
    - Missoula to South Missoula – Existing
    - South Missoula to Lolo – New (Grant Request)
    - Lolo to Florence – Existing
    - Florence to Sula – New (Grant Request)
    - Sula to Big Hole Battlefield – New (Grant Request)
    - Big Hole Battlefield to Divide – Existing
    - Divide to Rocker – New (Grant Request)
    - Rocker to Anaconda – New (Grant Request)
    - Anaconda to Missoula - Existing
- Equipment
    - DWDM Node
    - Router
    - DWDM Filter
    - PON Splitter

- Environmental Controlled Cabinets
    - Clearfield Fieldsmart Cabinets

Network Engineering
Drawings By: Rob Feenstra
Date: 9/14/2022
Email: rfeenstra@blackfoot.com
Phone: 406.541.5495

Blackfoot NTIA Logical Diagram – Blackfoot Middle Mile Grant

Proprietary and Confidential – Not to be Copied

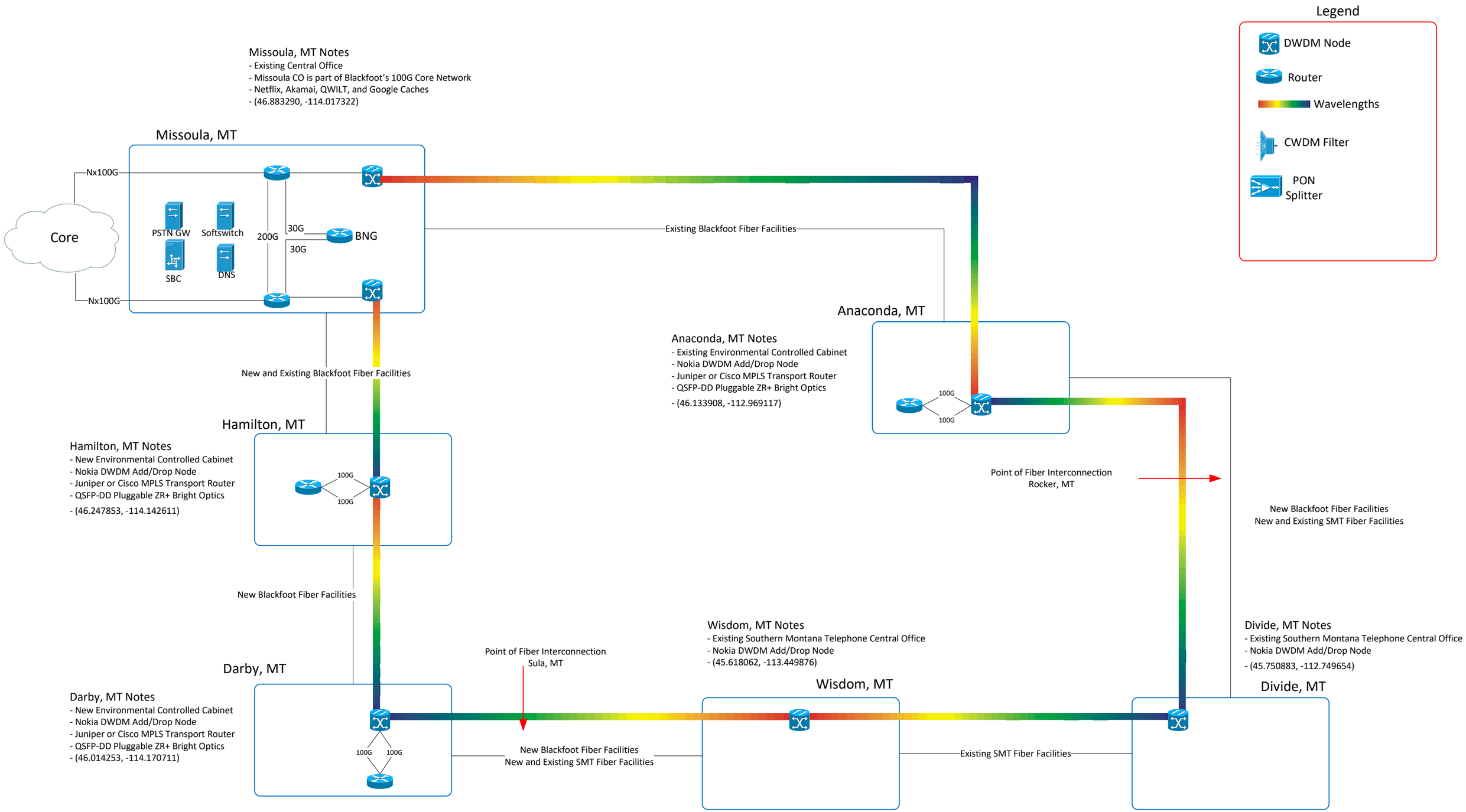

Network Engineering
Drawings By: Rob Feenstra
Date: 9/14/2022
Email: rfeenstra@blackfoot.com
Phone: 406.541.5495

Blackfoot NTIA Logical Diagram – Blackfoot Core 2022
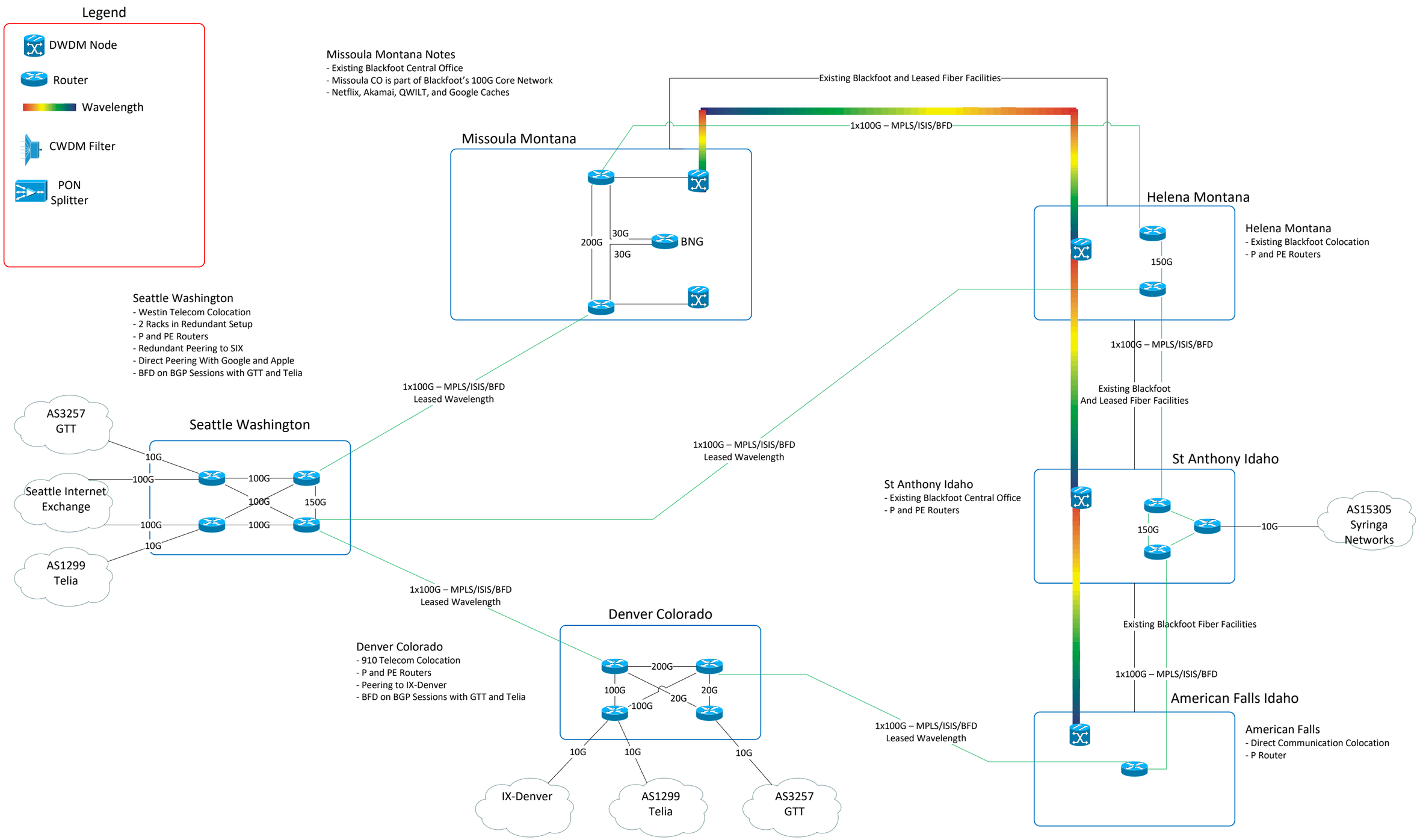
Proprietary and Confidential – Not to be Copied